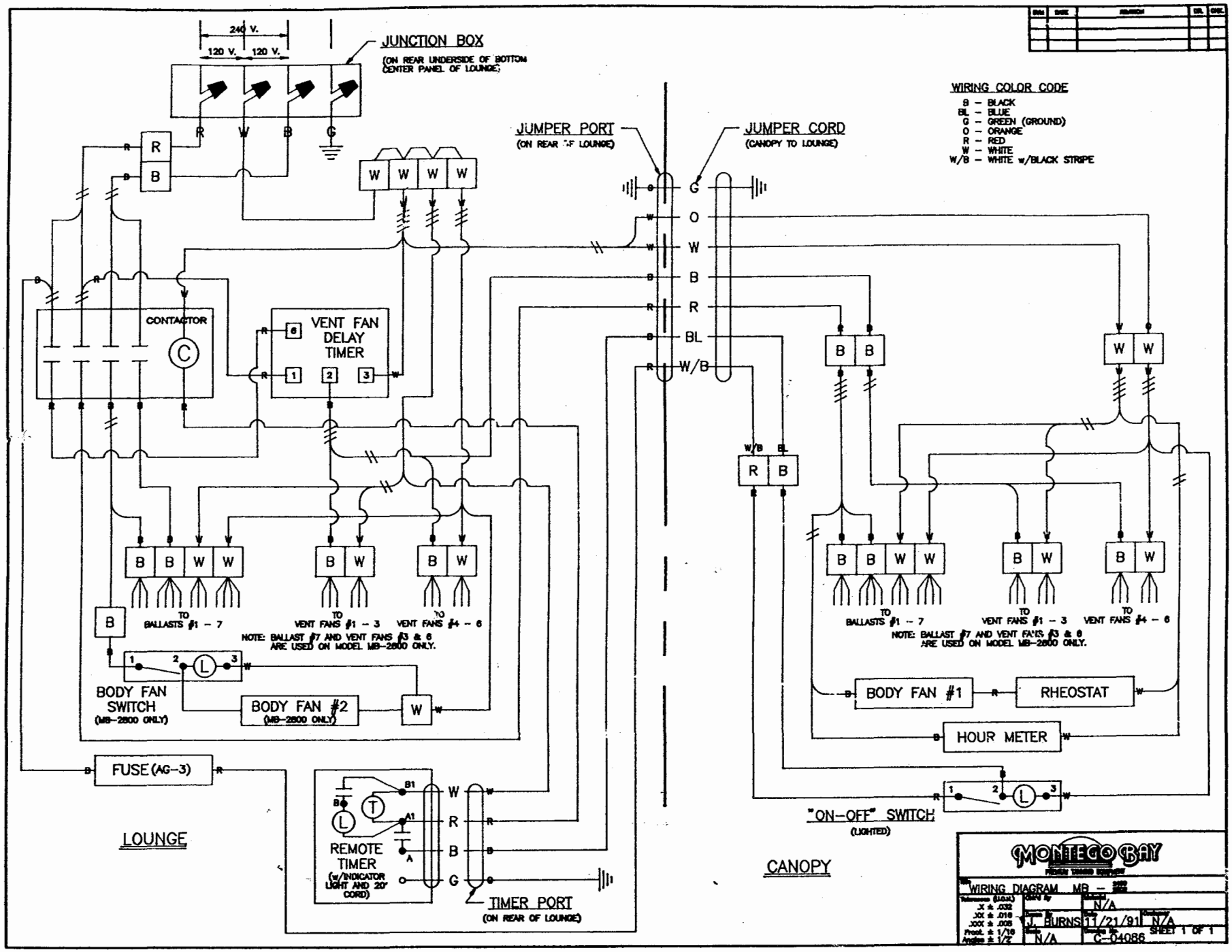
240 V.
120 V.
120 V.
JUNCTION BOX
(ON REAR UNDERSIDE OF BOTTOM CENTER PANEL OF LOUNGE)
R
W
B
G
JUMPER PORT
(ON REAR OF LOUNGE)
JUMPER CORD
(CANOPY TO LOUNGE)
WIRING COLOR CODE
B – BLACK
BL – BLUE
G – GREEN (GROUND)
O – ORANGE
R – RED
W – WHITE
W/B – WHITE w/BLACK STRIPE
CONTACTOR
VENT FAN DELAY TIMER
TO BALLASTS #1 – 7
TO VENT FANS #1 – 3
TO VENT FANS #4 – 6
NOTE: BALLAST #7 AND VENT FANS #3 & 6 ARE USED ON MODEL MB-2800 ONLY.
BODY FAN SWITCH
(MB-2800 ONLY)
BODY FAN #2
(MB-2800 ONLY)
FUSE (AG-3)
LOUNGE
REMOTE TIMER
(w/INDICATOR LIGHT AND 20' CORD)
TIMER PORT
(ON REAR OF LOUNGE)
BODY FAN #1
RHEOSTAT
HOUR METER
"ON-OFF" SWITCH
(LIGHTED)
CANOPY
MONTEGO BAY
WIRING DIAGRAM MB –
N/A
J. BURNS
11/21/91
N/A
N/A
C-04086
SHEET 1 OF 1